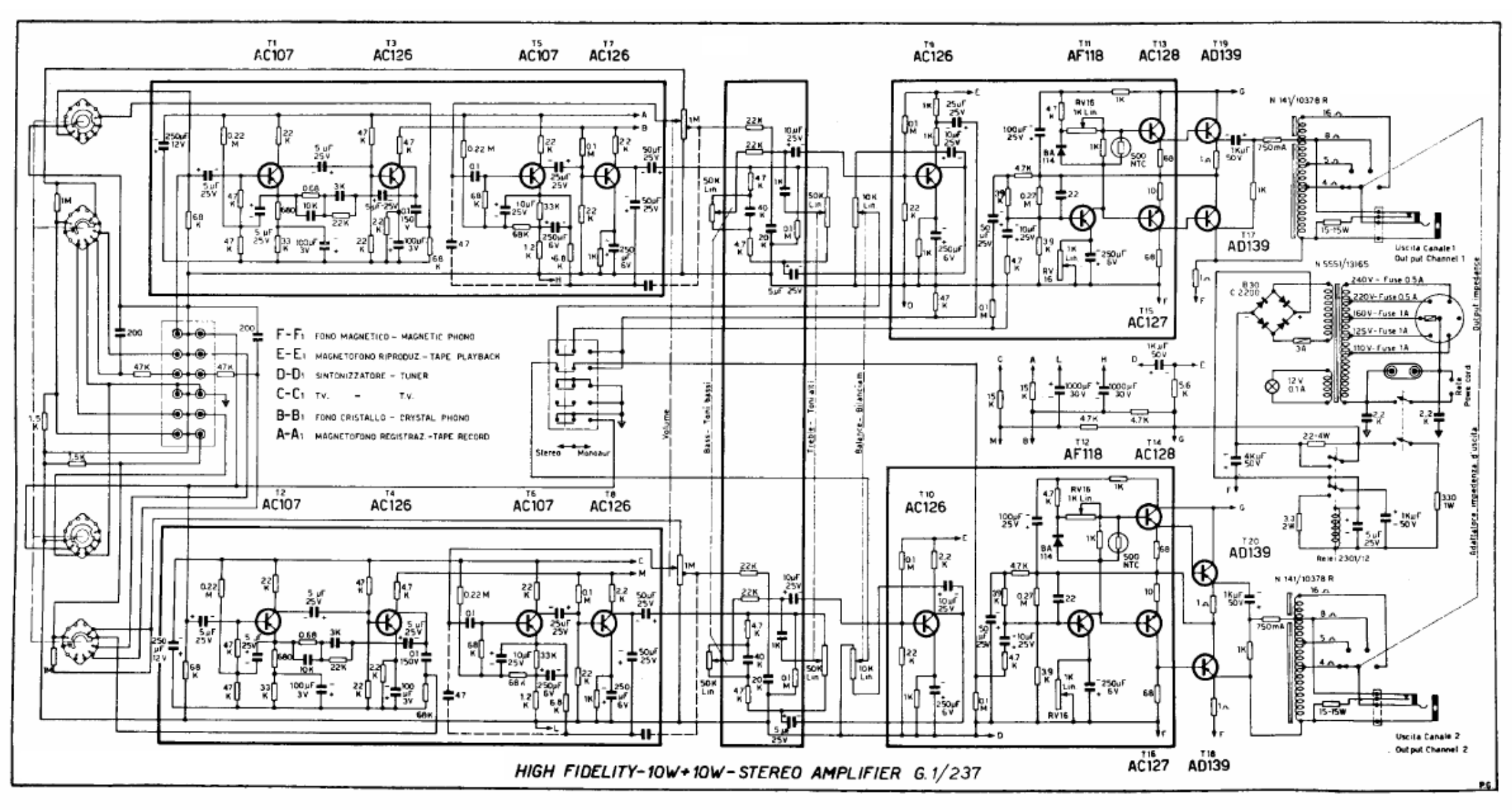

HIGH FIDELITY-10W+10W-STEREO AMPLIFIER G.1/237

PG